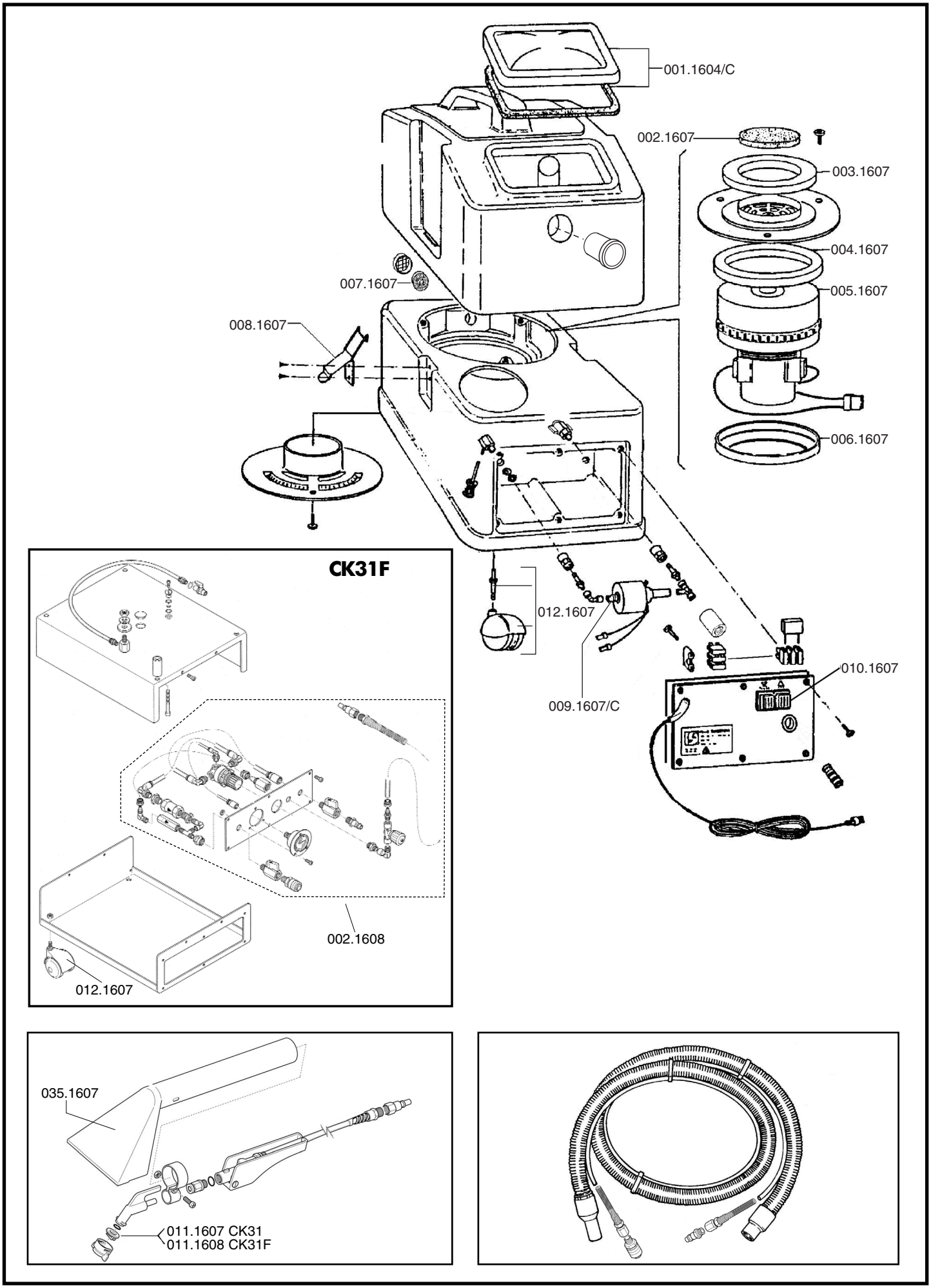
001.1604/C
002.1607
003.1607
004.1607
005.1607
006.1607
007.1607
008.1607
012.1607
009.1607/C
010.1607
CK31F
002.1608
012.1607
035.1607
011.1607 CK31
011.1608 CK31F